MUG

Lounge

Single pendant



Spec sheet

LG-01-P

MUG

Lounge

Single pendant

GLASS FINISH	Champagne Steel gray Light gray Opal white Satinated Champagne Satinated Steel gray Satinated Light gray
STRUCTURE FINISH	Matte black Pewter
STRUCTURE	Aluminium and steel
INNER DIFFUSER	Polycarbonate
OUTER DIFFUSER	Mouth-blown glass

LIGHT SOURCE	INTEGRATED LED MODULE 12W 3000°K 1400lm CRI 90+
VOLTAGE	220 - 240V 50Hz 120V 60Hz
DRIVER	ON-OFF (standard) Dimmable on request
ENVIRONMENT	Indoor
CERTIFICATION	CE UL WIRED IP20

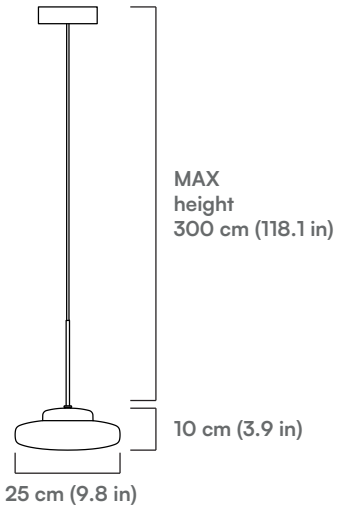

Product nomenclature of standard variation (custom solutions are available on request)

LG	-	01	-	P	-	PW	-	CH	-	1	-	E	-	1

COLLECTION	LIGHTS	MODEL	STRUCTURE FINISHES	DIFFUSER FINISH	CONTROL	INPUT	CCT
LG - Lounge	01 - Single 03 - 3 Lights 04 - 4 Lights	P - Pendant W - Wall L - Linear chandelier	PW - Pewter MB - Matte Black	CH - Champagne SG - Steel gray LG - Light gray SC - Satin champagne SS - Satin steel gray SL - Satin light gray OW - Opal white	1 - On/off (standard) D - Dali 0 - 0-10V T - Triac	E - 230V 50Hz U - 120V 60H	1 - 3000° K 2 - 2700° K